EXPLOSION-DRAWING / SPAREPARTS-OVERVIEW
EXPLOSIONSZEICHNUNG / ERSATZTEILLISTE

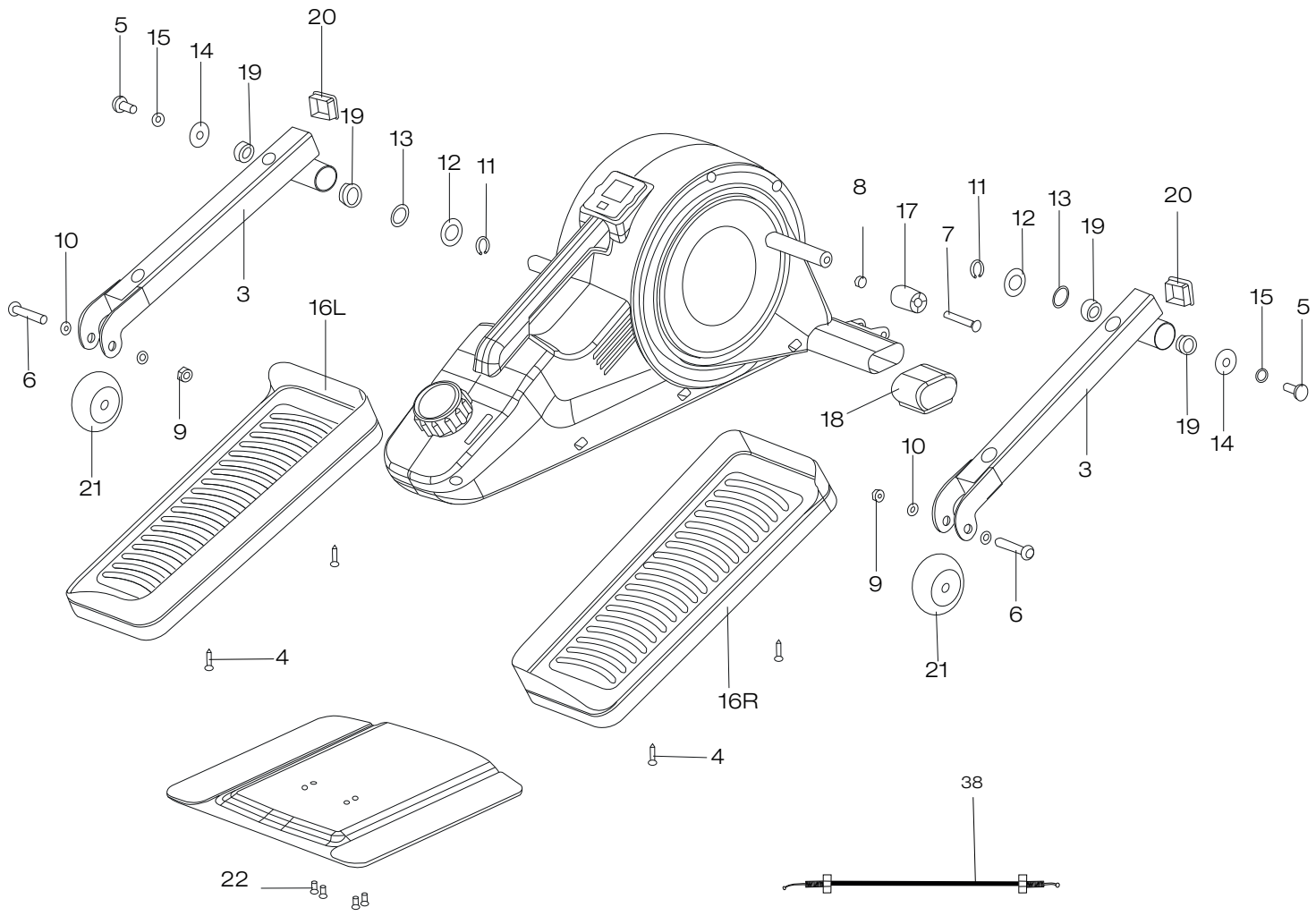

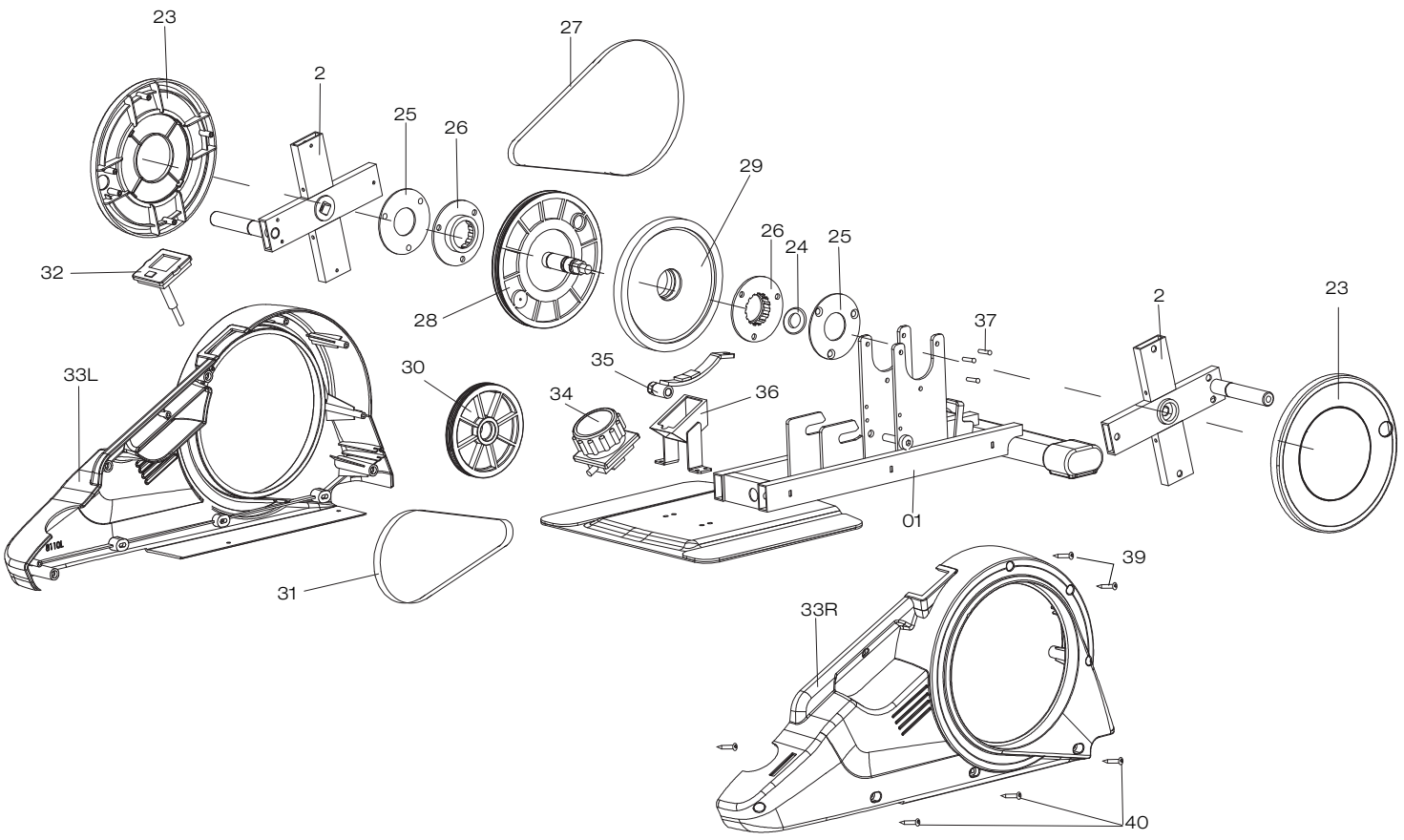

DESKFIT

STEPPER DFX70

Number in explosion drawing	Item number	Description
1	SP_DFX70_01	Main Frame
2	SP_DFX70_02	Crank
3	SP_DFX70_03	Pedal tube
4	SP_DFX70_04	Screw T4.2x13
5	SP_DFX70_05	Hexagon bolt M8x20
6	SP_DFX70_06	Hexagon bolt M8x45
7	SP_DFX70_07	Allen bolt M6x45x12
8	SP_DFX70_08	Nut M6
9	SP_DFX70_09	Nut M8
10	SP_DFX70_10	Flat washer D16x8x1.5
11	SP_DFX70_11	Circlip D16
12	SP_DFX70_12	Flat washer D16x8x1.5
13	SP_DFX70_13	Wave washer D15x25x0,3
14	SP_DFX70_14	Flat washer D26x8x2
15	SP_DFX70_15	Circlip D16
16	SP_DFX70_16L	Pedal left
16	SP_DFX70_16R	Pedal right
17	SP_DFX70_17	Transport wheel
18	SP_DFX70_18	End cap
19	SP_DFX70_19	Bushing
20	SP_DFX70_20	End cap pedal tube
21	SP_DFX70_21	Wheel
22	SP_DFX70_22	Screw T4.2x13

Nummer in Explosions-zeichnung	Artikelnummer	Beschreibung
23	SP_DFX70_23	Crank cover
24	SP_DFX70_24	Bearing
25	SP_DFX70_25	Bearing holder
26	SP_DFX70_26	Flywheel stator
27	SP_DFX70_27	Belt 1
28	SP_DFX70_28	Belt wheel big
29	SP_DFX70_29	Flywheel
30	SP_DFX70_30	Belt wheel small
31	SP_DFX70_31	Belt 2
32	SP_DFX70_32	Counter
33	SP_DFX70_33L	Cover left
33	SP_DFX70_33R	Cover right
34	SP_DFX70_34	Resistance
35	SP_DFX70_35	Magnetic Set
36	SP_DFX70_36	Holder
37	SP_DFX70_37	Hexagon Bolt M6x16
38	SP_DFX70_38	Tension wire
39	SP_DFX70_39	Screw T3.2x13
40	SP_DFX70_40	Screw T4.2x13
not in drawing	SP_DFX70_Carton	Carton
not in drawing	SP_DFX70_Manual	Manual
not in drawing	SP_DFX70_Screw set	Screw set